# RAK-COVE - COVBT017075500 - MATT WHITE

**Bathtubs**



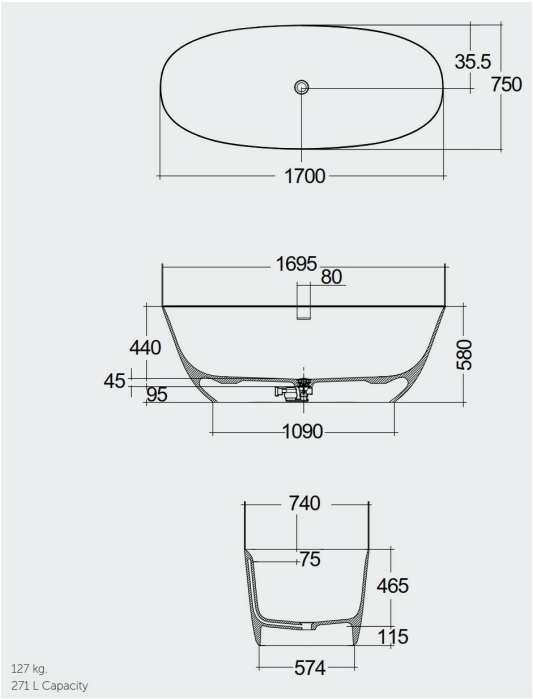


## TECHNICAL SPECIFICATIONS

| | |
|---|---|
| Suite: | RAK-COVE |
| Type: | RAK-COVE - COVBT017075500 - MATT WHITE |
| Dimensions: | 750 x 1700 mm |
| Weight: | 127 Kg |
| Color: | MATT WHITE - 500 |

| Code | Name |
|---|---|
| COVBT017075500 | RAK-COVE FREESTANDING BATHTUBS (IN RAKSOLID) MATT WHITE - 170X75 CM |

Dimensions: All dimensions in mm. Tolerance of vitreous china & fireclay items: ± 5% for below 200mm and ± 3% for above 200mm; for all other items tolerance ± 1%. Note: Due to a continuing development program to improve design and performance, the manufacturer reserves all rights to vary specifications without prior information. Please note accessories are for photographic use only.